SharpDrain®

wetroom materials

SDTP.1200
TILE INSERT & PANEL

Low profile (72mm) linear drain with a 50mm water seal. Perfect for wet rooms that have a shallow floor depth. Choice of coloured panels which can also be used as tile insert. Factory fitted membrane for added waterproof protection.

10 Years

10 YEAR GUARANTEE

		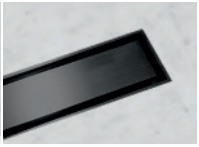		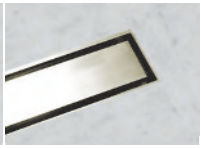	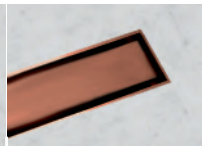
Product	Brushed Panel and Tile Insert	Black Panel and Tile Insert	Brass Panel and Tile Insert	Nickel Panel and Tile Insert	Bronze Panel and Tile Insert
Code	**STDP.1200**	**STDP.1200BL**	**STDP.1200BS**	**STDP.1200NI**	**STDP.1200BZ**

Specifications

MATERIAL	GRATING	CAPACITY
1.25 mm stainless steel (316) PP (Plastic) 1 1/2" solvent weld adapter	Brushed Stainless Steel panel and tile insert. PVD Coated colours	32 l/min
USAGE	**MEMBRANE**	**FLOORING**
Linear drain	330mm factory fitted sheet membrane	Tiles
WATER TRAP HEIGHT	**REMOVABLE TRAP FOR CLEANING**	
50mm	Yes	

www.wetroommaterials.com sales@wetroomaterials.com
UK: Derwentside, 25 Town Street, Duffield, Belper, Derbyshire, DE56 4EH T: +44 (0) 1332 840 820
IRL: Unit E1 Ballymount Industrial Estate, Walkinstown, Dublin 12, D12 WR60 T: +353 (0) 1 297 3488

SharpDrain®

wetroom materials

SDTP.1200

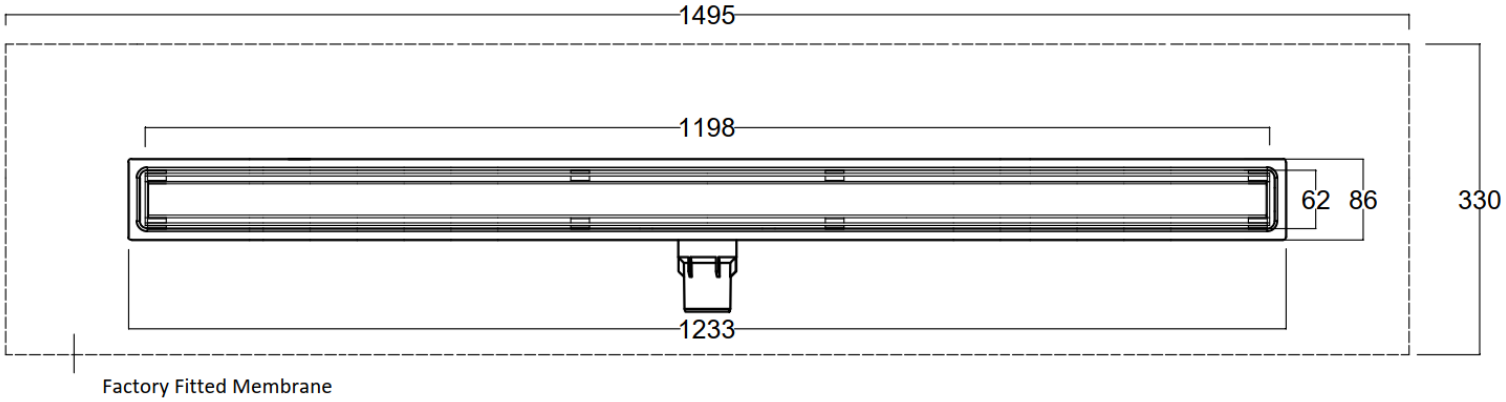

Plan

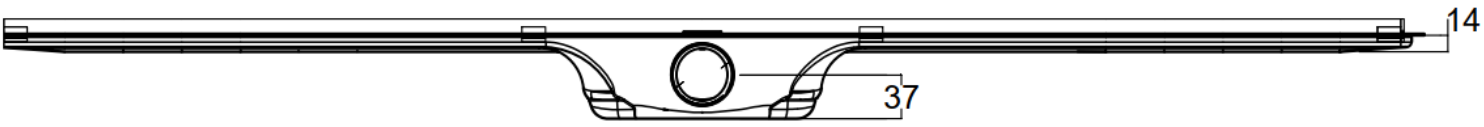

Front

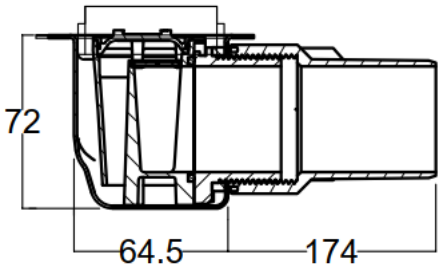

Side

www.wetroommaterials.com sales@wetroomaterials.com
UK: Derwentside, 25 Town Street, Duffield, Belper, Derbyshire, DE56 4EH T: +44 (0) 1332 840 820
IRL: Unit E1 Ballymount Industrial Estate, Walkinstown, Dublin 12, D12 WR60 T: +353 (0) 1 297 3488